5

BELLS

SECTION 5

Bells

CONTENTS

	Page No.
Gong Type Highway Cross Bells	5-2 to 5-15
Motor Driven Bells for Locomotives and Passenger Cars	5-16 & 5-17
Locomotive Type Bell	5-20 & 5-21
Mounting Fittings for Highway Crossing Bells	5-26

WESTERN RAILROAD SUPPLY COMPANY

DIVISION OF WESTERN INDUSTRIES, INC.

MANUFACTURERS & DISTRIBUTORS

GENERAL OFFICES and FACTORY

2742 WEST 36TH PLACE CHICAGO, ILL. 60632

2M/1967

PRINTED IN U.S.A.

Type 222 Highway Crossing Bell
For Top of Post Mounting

6 to 16 Volts D.C.

CAST ALUMINUM HOUSING 12″ STEEL GONG

Approximately 200 Strokes Per Minute

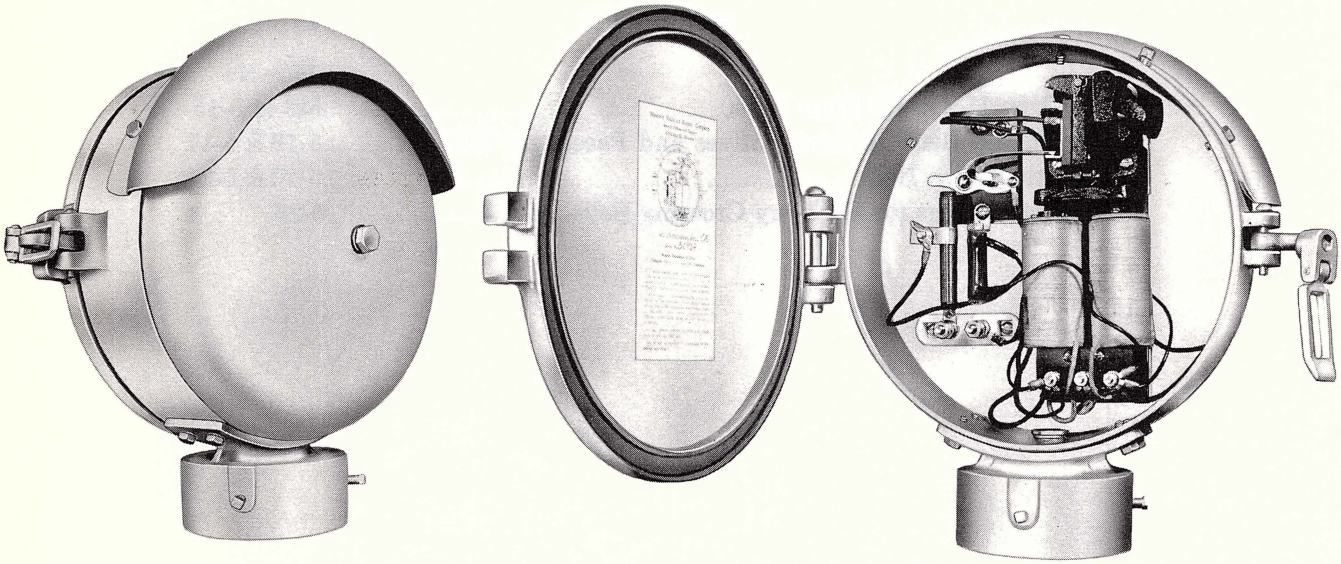

The low voltage Type 222 Highway Crossing Bells, commonly used with Flashing Lights and Automatic Gates, have magnet coils of 10 Ohms total resistance with an adjustable series resistance allowing the current through the coils to be adjusted to the proper operating value of 600* milliamperes at any voltage from 6 to 16. Therefore the one bell mechanism is applicable to nearly all highway crossing signal installations.

The five sizes of mounting sockets are attached, as required, to provide for mounting the bell on pipe masts of 3″, 3½″, 4″, 5″ and 6″ inside diameter, as specified.

The case, cover, mounting socket and rain shield are of cast aluminum making the total weight of the bell such that one man can easily place it atop a crossing signal mast.

The operating principle of the Type 222 bells was adopted in the year 1919. At that time careful calculations were made to determine the exact indicated weight of each moving component and extensive tests were conducted including the selection of the desired temper of the phosphor bronze hammer support, the correct thickness, alloy and shape of the bell-steel gong to insure the smooth oscillation of the movement and the constant, even, stroke for which the Type 222 bells are noted.

The standard Type 222 Bells are furnished with steel hammers producing a loud, clear sound wave for maximum audibility. For use in residential areas, near hotels or motels, or wherever the loud penetrating sound might be disturbing, a bakelite-faced hammer will be furnished when specified.

**NOTE: During operation the contact is closed approximately 1/3 of the time. For purposes of calculating battery drain a continuous current flow of 225 millamperes should be assumed.*

Type 222 Highway Crossing Bell For Top of Pipe Mounting

6 to 16 Volts D.C.

Approximately 200 Strokes Per Minute

Type 222 Bells for operation on higher voltages and for mounting on the side of the pipe mast or on flat surfaces are described on following pages.

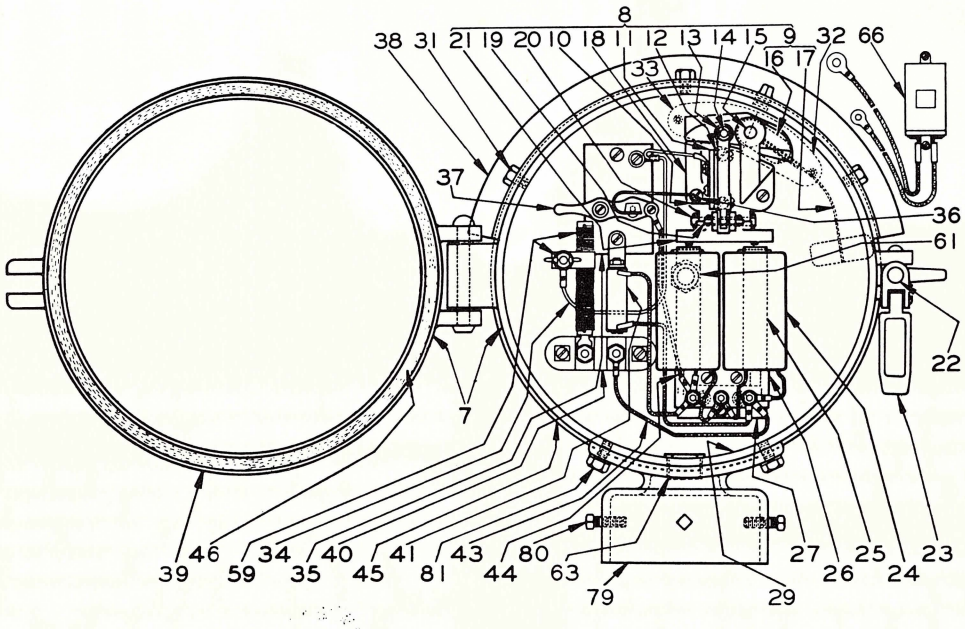

Ref. A

Ref. No.	Description	Piece No.
A	Type 222 Bell, 6 to 16 volts D.C., for mounting on 3½" I.D. pipe. (Specify loud or soft tone hammer)	0222BR
A1	Same as Ref. A but for mounting on 4" I.D. pipe	0222CR
A2	Same as Ref. A but for mounting on 3" I.D. pipe	0222DR
A3	Same as Ref. A but for mounting on 5" I.D. pipe	0222FR
A4	Same as Ref. A but for mounting on 6" I.D. pipe	0222HR

SPECIFY: Loud or Soft Tone Hammer. (Loud Tone Hammer will be furnished unless otherwise specified.)

For Replacement Parts Listing see Pages 5-8 and 5-9

Type 222A Highway Crossing Bell
For Side of Post or Wall Mounting

6 to 16 Volts D.C.

CAST ALUMINUM HOUSING **12″ STEEL GONG**

Approximately 200 Strokes Per Minute

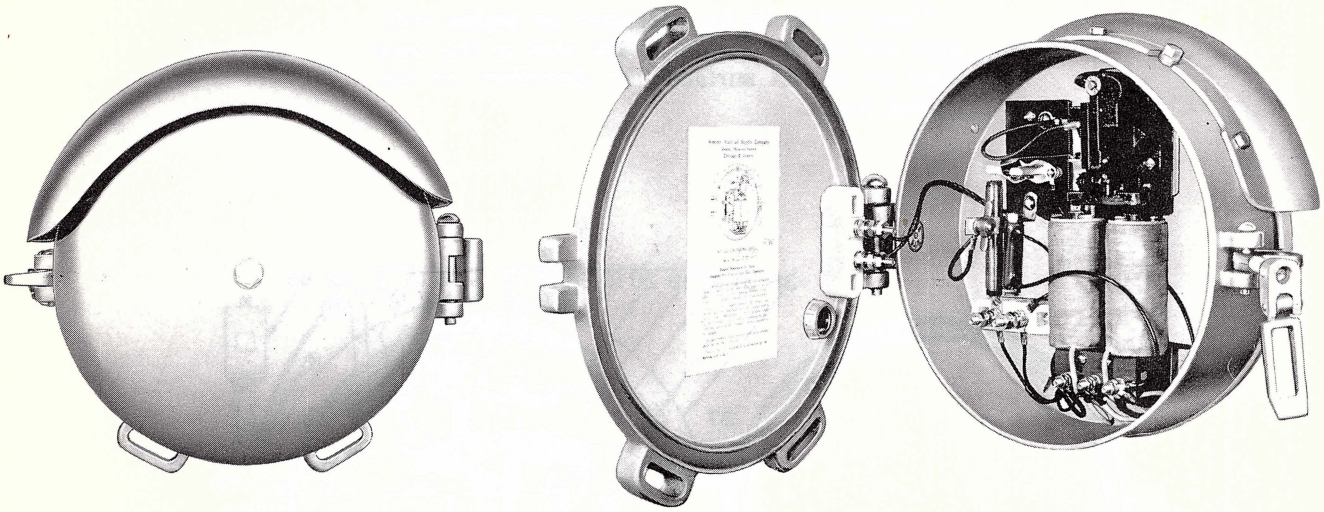

The mechanism of the low voltage Type 222A Highway Crossing Bell, for side of post or flat surface mounting, is identical with that of the type for top of post mounting, described on page 5-2.

The cover, however, is provided with slots so that "U" bolts of appropriate size can be used to mount the bell on the side of a pipe post of any specified diameter from 3″ I.D. to 8″ I.D. Or, by the use of bolts or lag screws, the bell can be mounted on a flat surface or column.

A terminal block is mounted in the cover for termination of control wires and a flexible wire connection to the terminal in the housing. This allows the mechanism to be swung open for inspection or servicing.

When the bell is mounted on the side of the mast of a cantilever type Crossing Signal it is convenient to use the flexible connection "Z" with one item 68 in the threaded opening at "Y" and the other in a pipe-tapped hole in the mast. When mounted on an "I" beam column or wood post, as in a shop building, the outside wire entrance "Y" is often most adaptable.

If mounted on the side of a pipe post it may be desirable to bring the control wires up inside the pipe and directly into the bell through the entrance "X".

Type 222A Highway Crossing Bell For Side of Pipe or Wall Mounting

6 to 16 Volts D.C.
Approximately 200 Strokes Per Minute

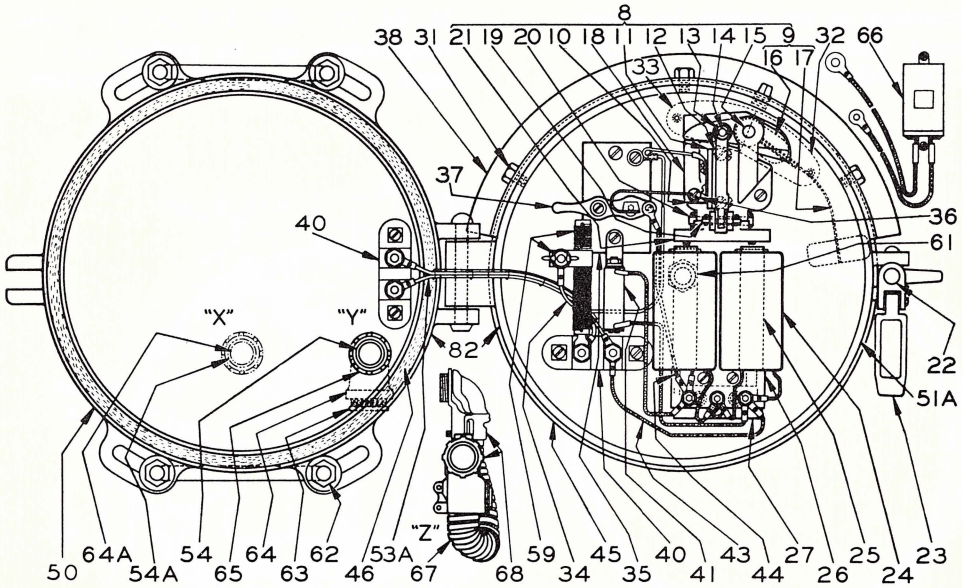

Ref. B

Ref. No.	Description	Piece No.
B	Type 222A Bell, 6 to 16 volts D.C., for mounting on side of pipe, direct wire entrance to pipe, view "X". (Specify size of pipe and loud or soft tone hammer)	0222A1R
B1	Same as Ref. B but with outside wire entrance "Y"	0222AR
B2	Same as Ref. B but with flexible connection "Z"	0222ARP

SPECIFY: Size of pipe and loud or soft tone hammer. (Loud tone hammer will be furnished unless otherwise specified).

For Replacements Parts Listing see Pages 5-8 and 5-9

Type 222 Highway Crossing Bell
For Top of Pipe Mounting

For 24, 32, 64, 120, 250, 300 and 600 Volts D.C.
Approximately 200 Strokes Per Minute

The mechanisms of Type 222 Bells for operation on commonly used D. C. voltages higher than 16 are essentially the same as described on pages 5-2 to 5-5. Magnet coils of appropriately higher resistance are combined with vitreous enameled resistors as necessary to allow the required current flow in the coils at the specified voltage. In addition a spark suppressor, item 66 in the diagram, is provided.

Standard designs are available for operation on the commonly encountered voltages of 24, 32, 64, 120, 250, 300 and 600 volts. Special arrangements can be worked out for other voltages, not exceeding 600, if required.

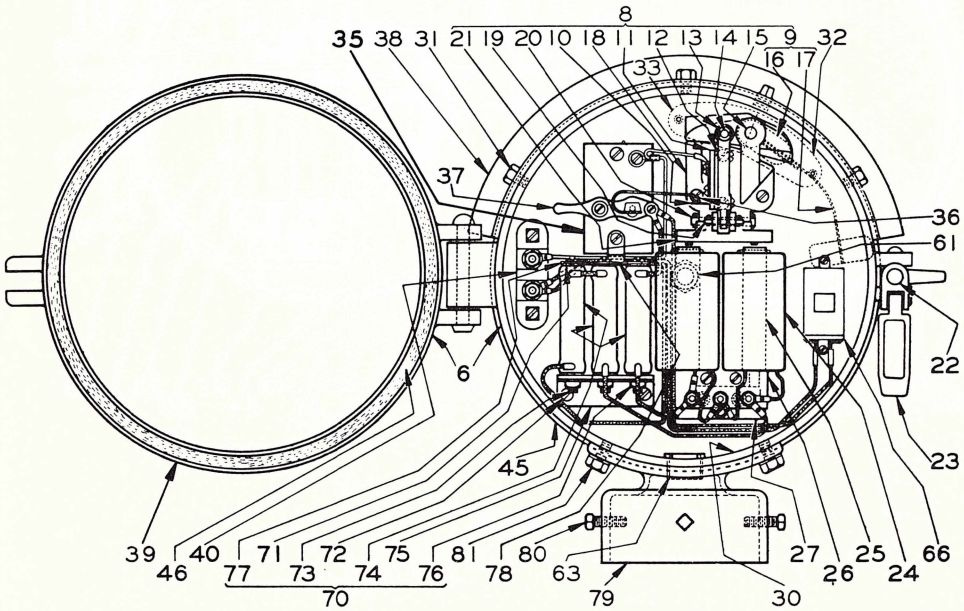

Ref. C

Ref. No.	Description	Piece No.
C	Type 222 Bell, 24 to 600 Volt D.C. for mounting on 3½″ I.D. pipe. (Specify operating voltage and loud or soft tone hammer)	0222B
C1	Same as Ref. C but for mounting on 4″ I.D. pipe	0222C
C2	Same as Ref. C but for mounting on 3″ I.D. pipe	0222D
C3	Same as Ref. C but for mounting on 5″ I.D. pipe	0222F
C4	Same as Ref. C but for mounting on 6″ I.D. pipe	0222H

SPECIFY: Operating Voltage and Loud or Soft Tone Hammer. (Loud Tone Hammer will be furnished unless otherwise specified.)

For Replacement Parts Listing see Pages 5-8 and 5-9

Type 222A Highway Crossing Bell For Side of Post or Wall Mounting

For 24, 32, 64, 120, 250, 300 and 600 Volts D.C.
Approximately 200 Strokes Per Minute

Physically the Type 222A Bells, for operation on the higher voltages, are identical with those described on page 5-4. Electrically they are as described on the opposite page, 5-6.

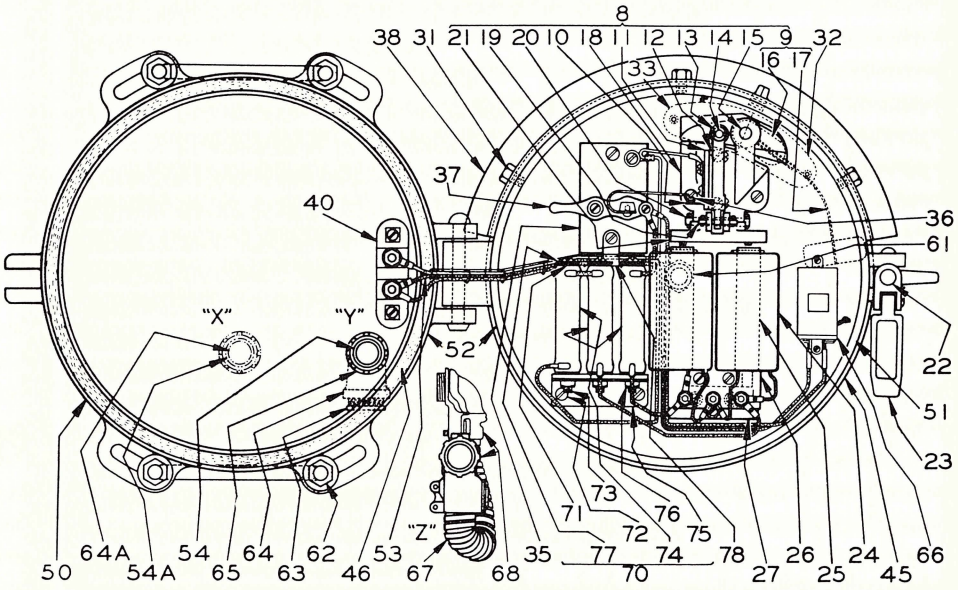

Ref. D

Ref. No.	Description	Piece No.
D	Type 222A Bell, 24 to 600 volts D.C., for mounting on side of pipe, direct wire entrance to pipe, view "X". (Specify operating voltage, size of pipe and loud or soft tone hammer)	0222A1
D1	Same as Ref. D but with outside wire entrance "Y"	0222A
D2	Same as Ref. D but with flexible connection "Z"	0222AP

SPECIFY: Operating Voltage, size of pipe and Loud or Soft Tone Hammer. (Loud Tone Hammer will be furnished unless otherwise specified.)

For Replacement Parts Listing see Pages 5-8 and 5-9

Highway Crossing Bells Type 222 and Type 1203

REPLACEMENT PARTS

All Type 222 and Type 1203 Highway Crossing Bells now have cast aluminum Case, Cover, Mounting Socket and Rain Shield. Cast Iron parts are no longer available. However the cast aluminum components are interchangeable with the cast iron parts and can be used for replacement.

Ref. No.	Description	Piece No.
6	Case and Cover Subassembly for Ref. C Bells	1249-20A
7	Case and Cover Subassembly for Ref. A Bells	1249-20
8	Movement Base Assembly Complete (Includes items 9 thru 21)	1215
9	Oscillator and Hammer Assembly (Includes items 16 and 17)	1215-1
10	Moving Contact (with Silver Contact)	1210-5
10a	Moving Contact (with Platinum Contact)	1210-5B
11	Link Insulator	1210-4
12	Insulation Strip	1210-10
13	Operating Link	1209-4
14	Operating Link Stud	1209-6
15	Oscillator Stud	1209-8
16	Oscillator with Bushing and Stud (Includes item 14)	1209-13
17	Hammer Complete with Reenforcement Springs (For Loud Tone)	1210-17
17a	Hammer Complete with Reenforcement Springs (Bakelite Faced for Soft Tone)	1210-20
18	Movement Base only	1209-1
19	Operating Link Pin Complete with Cotter Pins	1209-9
20	Armature Pin Complete with Cotter Pins	1209-10
21	Armature	1209-2
22	Locking Bolt	1410-11CA
23	Locking Hasp and Nut	1410-31CA
24	Magnet Coil (Specify Resistance of Bell)	1231-3
25	Magnet Core	1209-7
26	Terminal Block complete	1249-7
27	Magnet Bracket	1209-3
28	Case for Type 1203 Bell	1203-12A
29	Case for Ref. A (6-16 volt Bell)	1206A-10
30	Case for Ref. C Bells	1206C-10
31	Cap Screw, 5/16″ — 18 x 5/8″ lg. stl., hex. hd.	
32	Right Hand Dust Guard	1248-1
32a	Right Hand Dust Guard (fish type)	1248-3
33	Left Hand Dust Guard	1248-2
34	Flexible Lead Wire (Included in Item 59)	1222-11
35	Contact Block	1210-3
36	Contact Finger (With Silver Contacts)	1222-10
36a	Contact Finger (With Platinum Contacts)	1222-10B
37	Contact Finger Support	1209-14
38	Rain Shield	1208-CA
39	Cover for Ref. A and C Bells (Includes Packing)	1217-1CA
40	Porcelain Terminal Block	1056-16
41	Non-arcing Resistance Complete	1235
43	Flexible Wire Lead	1222-14
44	Flexible Wire Lead	1222-13
45	Steel Gong	1211
46	Cover Packing Strip	1217-2
50	Cover for Ref. B1 & D1 (Outside Wire Entrance)	1207-5CA
50a	Cover for Ref. B & D (Wire entrance into pipe)	1218-1CA
50b	Cover for Ref. B2 & D2 (flexible conduit entrance)	1207A-5CA

Highway Crossing Bells Type 222 and Type 1203

REPLACEMENT PARTS

(Continued)

Ref. No.	Description	Piece No.
51	Case for Ref. D, D1, D2	1206B-10CA
51a	Case for Ref. B, B1 and B2	1206-10CA
52	Case and Cover Subassembly for Ref. D1	1249-5B
52a	Case and Cover Subassembly for Ref. D	1249-4B
52b	Case and Cover Subassembly for Ref. D2	1249-4A
53	Flexible Wire Lead	1222-18
53a	Flexible Wire Leads for Ref. B	1222-22
54	Elbow Wire Outlet for Ref. B1 and D1 (Outside Wire Entrance) (Includes Items 63, 64 and 65)	1222-15
54a	Straight Wire Outlet for Ref. B1 and D1 (Wire Entrance Into Pipe) (Includes Items 64A and 65)	1222-16
59	Variable Resistance Unit	1210-28
61	Cap Screw, ½″-13x⅞″ Lg. Hex Hd., Steel and Steel Lock Washer	
62	U-Bolt for 4″ I.D. pipe	1207-1
62a	U-Bolt for 5″ I.D. pipe	1207-2
62b	U-Bolt for 3½″ I.D. pipe	1207-3
62c	U-Bolt for 3″ I.D. pipe	1207-4
62d	U-Bolt for 6″ pipe	1207-8
62e	Hinged "U" Bolt for 8″ pipe	3364-33
63	¾″ Chase Nipple	
64	¾″ Street El	
64a	¾″ Pipe Nipple	
65	¾″ Conduit Bushing	
66	Non-arcing Condenser	1101-87A
67	¾″ Penflex Conduit, 18″ Lg.	
68	¾″ 90° Squeeze Connector	
70	Subassembly of Shunt Resistance for 250 Volts D.C.	1237-25
70a	Subassembly of Shunt Resistance for 600 Volts D.C.	1237-25B
70b	Subassembly of Shunt Resistance for 300 Volts D.C.	1237-25C
71	Washer	1115
72	Mach. Screw, 1/4″-20x1/4″ Lg., Rd. Hd., Brass	
73	Stove Bolt, 1/4″-20x4″ Lg., Rd. Hd., Steel	
74	Resistance Unit, 350 Ohms	1222-17
74a	Resistance Unit, 700 Ohms	1222-17B
74b	Resistance Unit, 400 Ohms	1222-17C
75	Mounting Bracket	1290-2
76	Square Nut, ¼″-20, Steel	
77	Plain Brass Washer	
78	Wire Clip	1012-13
79	Socket for 3″ I.D. pipe (Includes Items 80 and 81)	1206-3B-CA
79a	Socket for 3½″ I.D. pipe (Includes Items 80 and 81)	1206-2B-CA
79b	Socket for 4″ I.D. pipe (Includes Items 80 and 81)	1206-4B-CA
79c	Socket for 5″ I.D. pipe (Includes Items 80 and 81)	1206-5B-CA
79d	Socket for 6″ I.D. pipe (Includes Items 80 and 81)	1206-6B-CA
80	Set Screw 5/16″-18x¾″ Lg. Cup Pt. Steel	
81	Cap Screw 5/16″-18x⅝″ Lg. Hex. Hd., Steel and Lockwasher	
82	Case and Cover Subassembly for Ref. B1	1249-4
82a	Case and Cover Subassembly for Ref. B	1249-5
82b	Case Cover Subassembly for Ref. B2	1249-5A
83	Wire Cable (For 1203 Bells Only)	1203-24
85	Cover for 1203 Bell, drilled for rectifier and terminal blocks only	1203-9C
85a	Cover for 1203 Bell, drilled for rectifier, 60 cycle transformer and terminal blocks	1203-9A
85b	Same as Ref. 85a except drilled for 25 cycle transformer	1203-9B
86	Rectifier only for 12-16 volt input, 25 or 60 cycles	1203-10
87	Transformer only, (specify primary voltage and frequency)	1203-11

Type 1203 Highway Crossing Bell

FOR NORMAL LOW VOLTAGE A.C. OPERATION WITH D.C. RESERVE

12″ Gong

Approximately 200 strokes per minute

Type 1203 Highway Crossing Bells consist of standard Type 222 bell mechanisms with a deepened cover in which to mount a copper oxide rectifier or a transformer and rectifier to supply direct current to the operating mechanism.

The Type 1203BR to 1203HR Bells may be operated directly from a 12-16 volt A.C. source, either 25 or 60 cycles, by connecting to the binding posts of the lower terminal block in the housing. When desired the bell can be normally operated from the A.C. source with D.C., approximately 2 volts lower than the A.C. supply, automatically applied to the upper block in case of A.C. power failure.

Variable resistance, item 59 in the diagram, is used to adjust to the input voltage applied within the range 12 to 16.

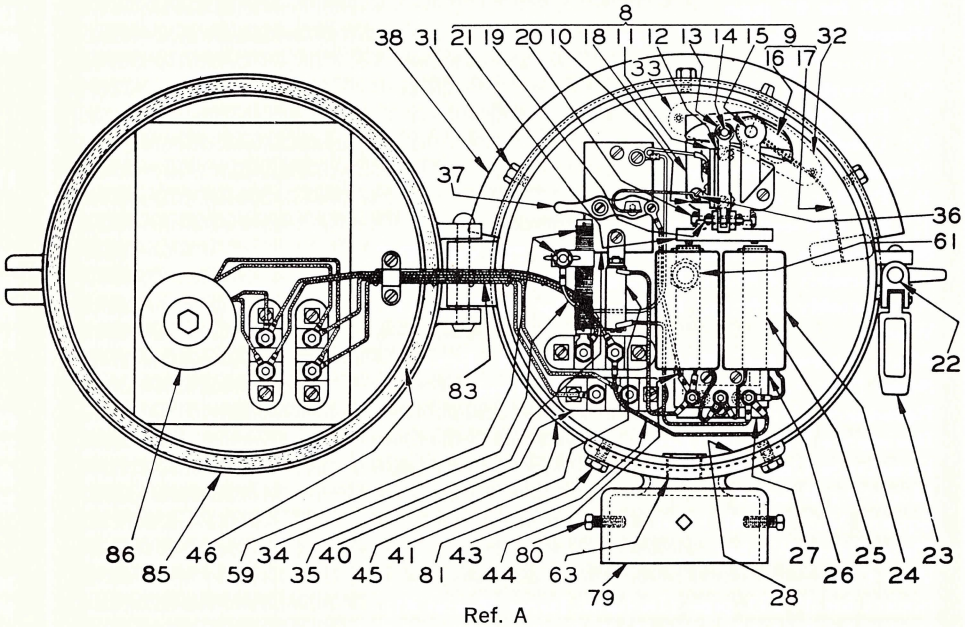

Ref. A

Ref. No.	Description	Piece No.
A	Type 1203 Bell for normal low voltage A.C. with D.C. reserve for mounting on top of 3½″ I.D. pipe. Specify operating voltage and loud or soft tone hammer	1203BR
A1	Same as Ref. A but for mounting on 4″ I.D. pipe	1203CR
A2	Same as Ref. A but for mounting on 3″ I.D. pipe	1203DR
A3	Same as Ref. A but for mounting on 5″ I.D. pipe	1203FR
A4	Same as Ref. A but for mounting on 6″ I.D. pipe	1203HR

SPECIFY: Operating Voltage and Loud or Soft Tone Hammer. (Loud Tone Hammer will be furnished unless otherwise specified.)

NOTE: Type 1203 Highway Crossing Bell can be mounted on the side of a pole or flat surface by use of the Gooseneck Bracket shown on page 5-26.

For Replacement Parts Listing see pages 5-8 and 5-9.

Type 1203 Highway Crossing Bell

FOR OPERATION ON COMMERCIAL A.C. POWER

115 or 230 Volts 25 or 60 Cycles

12″ Gong

Approximately 200 strokes per minute

The Type 1203B to 1203H Bells are the same as the 1203BR to 1203HR except that a transformer is provided to reduce commercial sources of 115 or 230 volts to 12-16 volts for the rectifier input. Secondary taps on the transformer provide the necessary adjustment for variations in A.C. line voltage.

When ordering Bells with transformers it is necessary to specify the voltage and frequency of the A.C. supply.

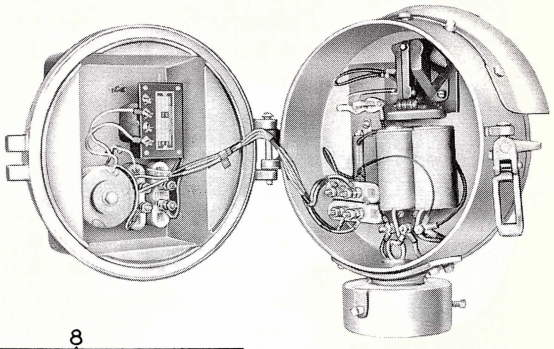

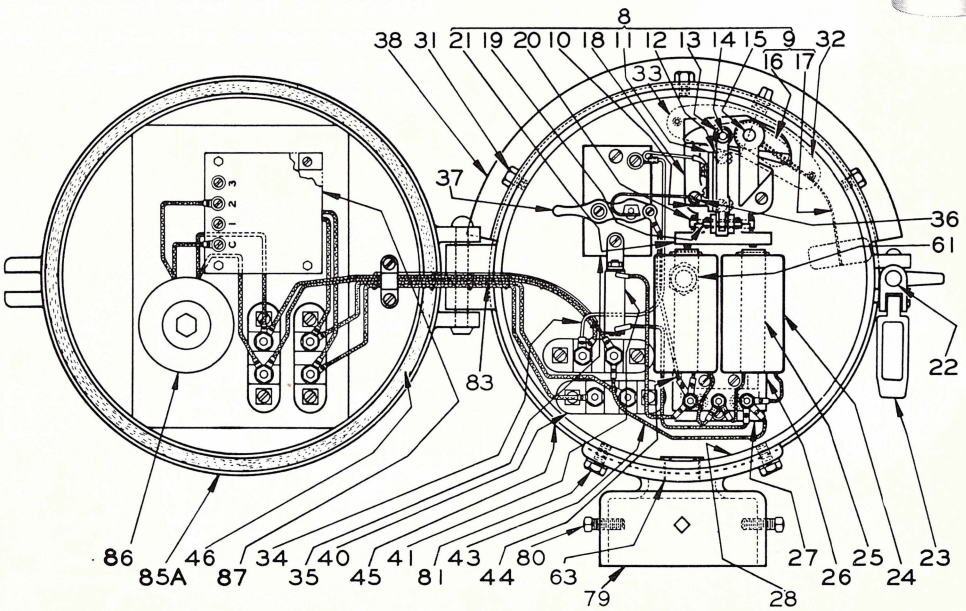

Ref. B

Ref. No.	Description	Piece No.
B	Type 1203 Bell A.C. operation for mounting on top of 3½″ I.D. pipe. Specify operating voltage, frequency (115 or 230 volts, 25 or 60 cycles), and loud or soft tone hammer	1203B
B1	Same as Ref. B but for mounting on 4″ I.D. pipe	1203C
B2	Same as Ref. B but for mounting on 3″ I.D. pipe	1203D
B3	Same as Ref. B but for mounting on 5″ I.D. pipe	1203F
B4	Same as Ref. B but for mounting on 6″ I.D. pipe	1203H

SPECIFY: Operating Voltage and Frequency (115 or 230 volts, 25 or 60 cycles) and Loud or Soft Tone Hammer. (Loud Tone Hammer will be furnished unless otherwise specified.)

NOTE: Type 1203 Highway Crossing Bell can be mounted on the side of a pole or flat surface by use of the Gooseneck Bracket shown on page 5-26.

For Replacement Parts Listing see pages 5-8 and 5-9.

Type 1275 Pedestrian Crossing Bell

For 6 to 16 Volts D.C.

CAST ALUMINUM HOUSING 8″ STEEL GONG

Approximately 225 Strokes Per Minute

Bakelite Faced Soft-tone Hammer

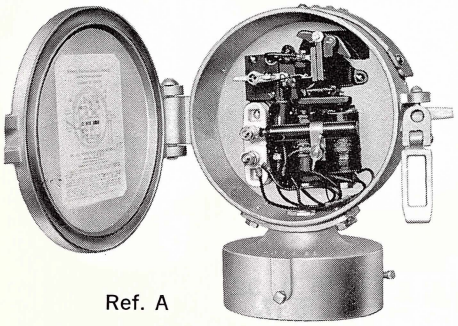

Ref. A

Type 1275 Pedestrian Crossing Bell was especially designed for use in residential areas where too loud a warning might prove offensive. It is identical with the well-known Type 222 Bell except that it is built with an 8″ gong and proportionally smaller parts. The Type 1275 bell is equipped with a variable resistance for 6 to 16 volts D.C. operation.

It is furnished with either a mounting socket, attached to the base, for mounting on the top of a pipe post or with adaptor clamps and "U" bolts for mounting on the side of the mast, as listed below.

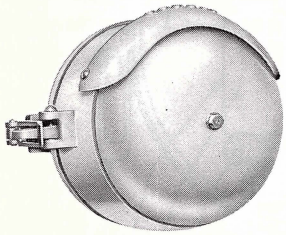

Ref. B

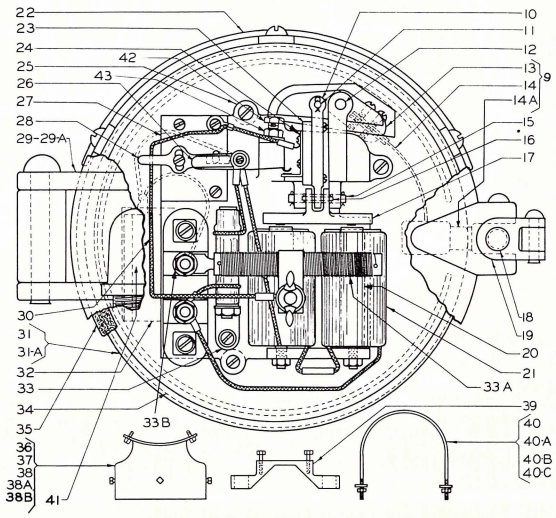

Ref. No.	Description	Piece No.
A	Type 1275 Pedestrian Crossing Bell for mounting on top of 3½″ I.D. pipe post	1275BR
A1	Same as Ref. A but for mounting on 4″ I.D. pipe post	1275CR
A2	Same as Ref. A but for mounting on 3″ I.D. pipe post	1275DR
A3	Same as Ref. A but for mounting on 5″ I.D. pipe post	1275FR
A4	Same as Ref. A but for mounting on 6″ I.D. pipe post	1275HR
B	Type 1275 Pedestrian Crossing Bell with adaptor clamps and "U" Bolts, for mounting on side of pipe post. (Specify I.D. of pipe)	1275AR

For Replacement Parts Listing see opposite page.

Type 1275

Cast aluminum pa
and Rain Shield are i

Width x Height	3-1/2 x 2	3-1/2 x 4	7-1/2 x 4-3/4	7-1/2 x 10
Covers	$50.00	$90.00	N.A.	N.A.
Yellow Pages	$25.00	$45.00	Any size can be arranged. Write for rates	$170.00
Typesetting	$10.00	$15.00		$40.00

Photos (for halftones) — $10.00 each

20% Discount to museums and other non-profit organizations.

Ref. No.		
9	Assembly	B
10	Operati	
11	Oper	93
12	Os	1294
13	C	1280-1
14		1299B
14a		1299-5B
15	....	1292
16	.....	1291
17	.....	1281-1
	.....	1410-11CA
	.....	1410-31CA
	.....	1296
	.....	1297-3-5
	.....	1284CA
	.....	1287
	.....	1288
	.....	1283
	.....	1289
	.....	1286
	.....	1285
	.....	1276-5CA
	.....	1276-3CA
	.....	1288-1
	.....	1277CA
	..... ig)	1277-1CA
	.....	1101-87B
	.....	1235
	.....	1210-28A
	..... t spacer	1290-5
	.....	1295
3	ng strips	1276-4
36	or 4" I.D. pipe w/mounting screws and set screws	1278-3CA
37	et for 3½" I.D. pipe w/mounting screws and set screws	1278-4CA
38	C ocket for 3" I.D. pipe w/mounting screws and set screws	1278-5CA
38a	Case socket for 5" I.D. pipe w/mounting screws and set screws	1278-5ACA
38b	Case socket for 6" I.D. pipe w/mounting screws and set screws	1278-6CA
39	Clamp for mounting bell to side of pole (2 required)	1279-1
40	U-bolt for mounting bell to 4" I.D. pole (2 required)	1276-11
40a	U-bolt for mounting bell to 3½" I.D. pole (2 required)	1276-10
40b	U-bolt for mounting bell to 3" I.D. pole (2 required)	1276-13
40c	U-bolt for mounting bell to 5" I.D. pole (2 required)	1276-12
41	Wire outlet (used only on 1275A bell)	1222-15
42	No. 10-24x1/2" long hex head steel cap screw	
43	No. 10-24 steel hex nut	

Type 1275 Pedestrian Crossing Bell

Cast aluminum parts furnished for the Case, Cover, Mounting Socket and Rain Shield are interchangeable with cast iron parts formerly used.

REPLACEMENT PARTS

Ref. No.	Description	Piece No.
9	Assembly of oscillator and hammer	1275-3B
10	Operating link	1282
11	Operating link stud	1293
12	Oscillator pin	1294
13	Oscillator complete with bushings and stud	1280-1
14	Hammer complete with bakelite head	1299B
14a	Bakelite head only	1299-5B
15	Armature pin	1292
16	Link bracket pin	1291
17	Armature	1281-1
18	Locking bolt	1410-11CA
19	Locking hasp and nut	1410-31CA
20	Magnet core	1296
21	Magnet coil (2 required)	1297-3-5
22	Rain shield	1284CA
23	Contact mounting block	1287
24	Moving contact	1288
25	Base plate	1283
26	Contact finger	1289
27	Contact mounting block	1286
28	Contact finger support	1285
29	Door complete (for side of pole mounting)	1276-5CA
29a	Door complete (for top of pole mounting)	1276-3CA
30	Flexible wire lead	1288-1
31	Bell case (for top of pole mounting)	1277CA
31a	Bell case (for side of pole mounting)	1277-1CA
32	¼ M.F. condenser	1101-87B
33	Non-arcing resistance	1235
33a	Variable resistance unit	1210-28A
33b	Variable resistance unit spacer	1290-5
34	Steel gong	1295
35	Felt door packing strips	1276-4
36	Case socket for 4" I.D. pipe w/mounting screws and set screws	1278-3CA
37	Case socket for 3½" I.D. pipe w/mounting screws and set screws	1278-4CA
38	Case socket for 3" I.D. pipe w/mounting screws and set screws	1278-5CA
38a	Case socket for 5" I.D. pipe w/mounting screws and set screws	1278-5ACA
38b	Case socket for 6" I.D. pipe w/mounting screws and set screws	1278-6CA
39	Clamp for mounting bell to side of pole (2 required)	1279-1
40	U-bolt for mounting bell to 4" I.D. pole (2 required)	1276-11
40a	U-bolt for mounting bell to 3½" I.D. pole (2 required)	1276-10
40b	U-bolt for mounting bell to 3" I.D. pole (2 required)	1276-13
40c	U-bolt for mounting bell to 5" I.D. pole (2 required)	1276-12
41	Wire outlet (used only on 1275A bell)	1222-15
42	No. 10-24x1/2" long hex.head steel cap screw	
43	No. 10-24 steel hex.nut	

Type 555 Highway Crossing Bell

Motor Driven

For 6 to 600 Volts D.C. or 115 or 230 Volts A.C., 25 or 60 cycles

CAST ALUMINUM HOUSING

12″ STEEL GONG

Approximately 112 Strokes Per Minute

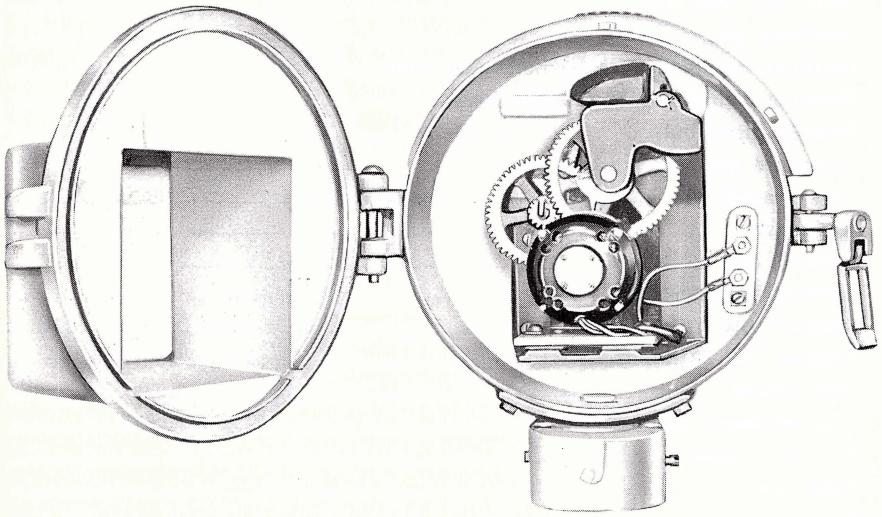

The Type 555 Gong Type Crossing Bell is of the same general appearance as the Type 222 Bell except that the hinged cover is enlarged to house the motor driven mechanism, consisting of a motor, two gears and a bell hammer. A cam mounted on one of the gear wheels engages and raises a weight to a certain point and then, due to gravity, allows it to drop. The bell hammer is connected to this operating weight by a shaft which causes the hammer to strike the gong a sharp heavy blow when the weight drops, giving a clear penetrating sound. The hammer blows are so timed that the sound waves of one blow are not broken up by subsequent waves.

This bell can be furnished for operation on any specified direct current voltage from 6 to 600; or for use on alternating current commercial lighting circuits of 115 or 230 volts, either 25 or 60 cycle, as specified.

Special versions of this bell have been developed for use on Diesel locomotives and on "Push-Pull" suburban passenger cars.

For illustrations and details see pages 5-16 & 5-17.

Ref. No.	Description	Piece No.
A	Type 555 Bell for mounting on top of 3½″ I.D. pipe post. Specify D.C. voltage or A.C. voltage and frequency	0555B
A1	Same as Ref. A but for mounting on 4″ I.D. pipe post	0555C
A2	Same as Ref. A but for mounting on 3″ I.D. pipe post	0555D
A3	Same as Ref. A but for mounting on 5″ I.D. pipe post	0555F
A4	Same as Ref. A but for mounting on 6″ I.D. pipe post	0555H

Type 555C Bell can be mounted on the side of pole or flat surface by use of the Gooseneck Bracket shown on page 5-26.

Type 555 Highway Crossing Bell

(Continued)

REPLACEMENT PARTS

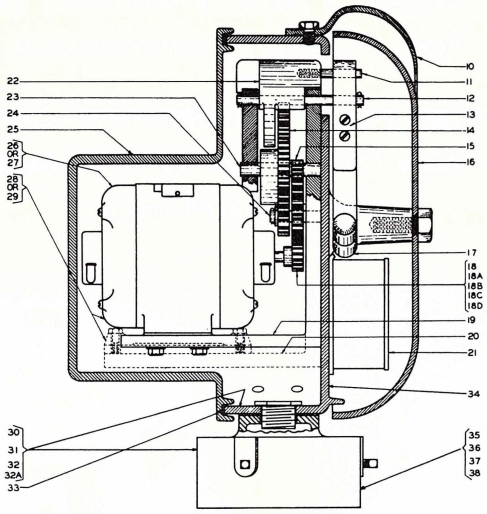

Cast aluminum parts furnished for the Case, Cover, Mounting Socket and Rain Shield are interchangeable with cast iron parts formerly used.

Ref. No.	Description	Piece No.
10	Rain Shield	1208-CA
11	Operating weight stud	1508-4
12	Operating weight shaft	1508-3
13	Hammer support	1508-2
14	Drive Gear	1410-1
15	Intermediate gear and pinion	1410-16
16	Steel gong	1211
17	Hammer with reinforcements	1210-17
18	Motor pinion 12 teeth 5/16″ bore	1410-15
18a	Motor pinion 14 teeth 5/16″ bore	1410-15A
18b	Motor pinion 16 teeth 5/16″ bore	1410-15B
18c	Motor pinion 20 teeth 5/16″ bore	1410-15C
18d	Motor pinion 14 teeth 3/8″ bore	1410-15D
19	Frame (Bells after Serial No. 600)	1411-3-CA
20	Frame (Bells before Serial No. 601)	1411-1
21	Capacitor for 110 V. A.C. Motor	1508-19
21a	Capacitor for 230 V. A.C. Motor	1508-19A
22	Operating weight	1508-1
23	Drive gear shaft	1410-17
24	Intermediate gear stud	1508-14
25	Door complete with packing	1507-1
26	A.C. Motor (Bells after Serial No. 600) (Specify voltage and frequency)	0700-220
27	D.C. Motor (Bells after Serial No. 600) (Specify voltage)	0700-219
28	A.C. Motor (Bells before Serial No. 601) (Specify voltage and frequency)	1410-34
29	D.C. Motor (Bells before Serial No. 601) (Specify voltage)	1410-35
30	Case and socket assembly for mounting on 3½″ I.D. pipe	1506-1A
31	Case and socket assembly for mounting on 4″ I.D. pipe	1506-2A
32	Case and socket assembly for mounting on 3″ I.D. pipe	1506-3A
32a	Case and socket assembly for mounting on 5″ I.D. pipe	1506-4A
33	Door Packing	1217-2
34	Case for A.C. Bell	1506-CA
34a	Case for D.C. Bell	1506A-CA
35	Socket subassembly for 3″ I.D. pipe	1206-3B-CA
36	Socket subassembly for 3½″ I.D. pipe	1206-2B-CA
37	Socket subassembly for 4″ I.D. pipe	1206-4B-CA
38	Socket subassembly for 5″ I.D. pipe	1206-5B-CA
38a	Socket subassembly for 6″ I.D. pipe	1206-6B-CA

Type 555ACN Motor Driven Bells

FOR DIESEL LOCOMOTIVES
OR
"PUSH-PULL" PASSENGER CARS

74 Volts D.C. or 115 Volts 60 Cycles

Typical Installations

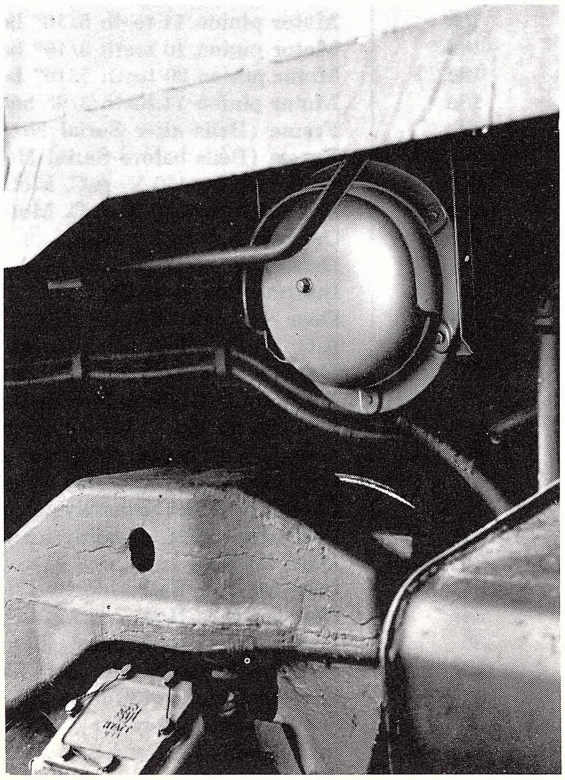

Type 555ACN Motor Driven Bells

FOR DIESEL LOCOMOTIVES and "PUSH-PULL" PASSENGER CARS

74 volts D.C. or 115 volts, 60 cycles

CAST ALUMINUM HOUSING 12" BELL-STEEL GONG

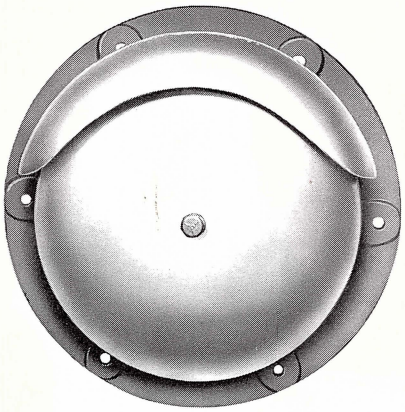

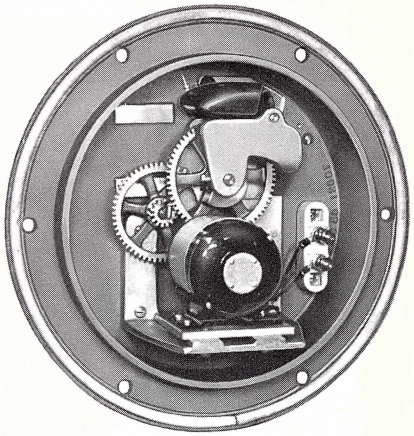

The Type 555ACN Gong Type Motor Driven Bell has an operating mechanism which is generally similar to that of the Type 555 Highway Crossing Bell, consisting of a 1/50 horsepower motor, two gears and a bell hammer. A cam mounted on one of the gear wheels engages and raises a weight to a certain point and then allows it to drop. The bell hammer is connected to the operating weight which causes the hammer to strike the bell-steel gong a sharp heavy blow when the weight drops, giving a clear penetrating sound. The hammer blows are so timed that the sound waves of one blow are not broken up by subsequent sound waves.

This type of mechanism is well adapted for use on Diesel locomotives, "Push-Pull" type passenger cars and other moving vehicles. Swaying and jolting motions do not interfere with the even spacing of the hammer blows which usually occurs with vibrating bells.

For "Push-Pull" cars and most locomotive applications the Type 555ACN-115 and Type 555ACN-74 bells are used. They have a flange for mounting the bell in the bulkhead with the gong on the outside and the mechanism on the inside for easy access for service and inspection.

The Type 555ACN-74C Bell has a cover to enclose the mechanism so that the entire bell may be mounted externally, as below the running board on a locomotive, or similar location.

Type 555ACN-115 Bell is equipped with an A.C. motor for operation from the 115 volt, 60-cycle, car lighting circuit.

Type 555ACN-74 and Type 555ACN-74C Bells are equipped with 74 volt D.C. motors for operation from the Diesel engine starting battery.

Ref. No.	Description	Piece No.
A	Type 555ACN Motor Driven Bell, bulk-head mounting, for 115 volt, 60 cycle operation	0555ACN-115
A1	Same as Ref. A but for 74 volt D.C. operation	0555ACN-74
B	Type 555ACN-74C Motor Driven Bell, fully enclosed, for 74 volt D.C. operation	0555ACN-74C

Type AL-50 Locomotive Type Bell Motor Driven

For 10 or 110 Volts D.C. and 115 or 230 Volts A.C., 25 or 60 cycles

16″ LOCOMOTIVE GONG

Approximately 32 Strokes Per Minute

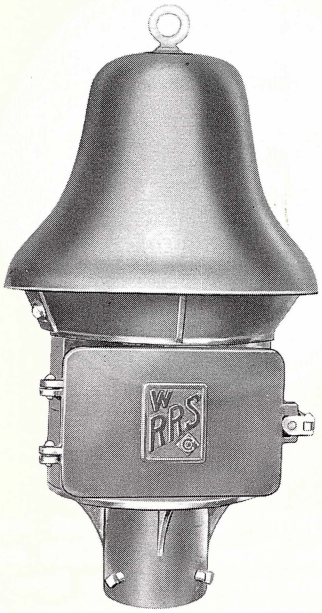

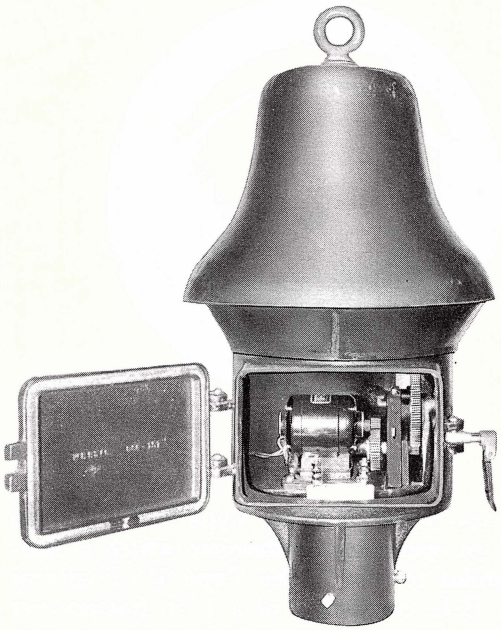

The Type AL-50 Motor Driven Locomotive Type Bell is particularly adapted for use where a very penetrating audible warning is required, as in industrial areas and inside plants or mills with high ambient noise level.

The mechanism is extremely simple, consisting of a motor and a train of gears to drive a cam to raise a weight, which, being attached to the clapper, delivers heavy, evenly-timed blows to the inside of the 16″ bell-steel gong. The motor and gears are mounted on a removable base.

The bell may be equipped with a motor to operate on any commercial A.C. voltage and frequency or on 10 volts or 110 volts D.C., as specified.

Ref. No.	Description	Piece No.
A	Type AL-50 Locomotive type bell for mounting on top of 4″ I.D. pipe post. (Specify D.C. voltage or A.C. voltage and frequency)	AL-50C
A1	Same as Ref. A but for mounting on 5″ I.D. pipe post	AL-50F

Type AL-50C Bell can be mounted on the side of pole or flat surface by use of the Gooseneck Bracket shown on page 5-26.

For Replacement Parts Listing see opposite page

Type AL-50 Locomotive Type Bell

REPLACEMENT PARTS

For bells with 3-piece mechanism housing

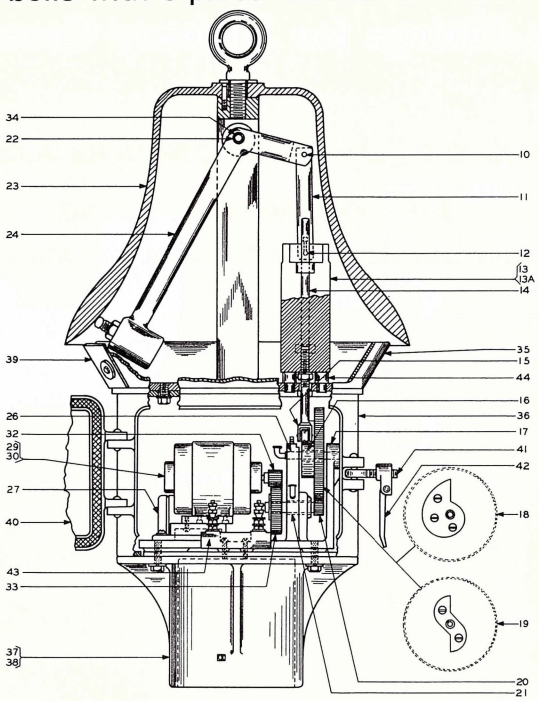

Ref. No.	Description	Piece No.
10	Connecting link pin	0050-18
11	Connecting link	0050-26
12	Operating weight pin	0050-32
13	Operating weight with bumpers (For Bells shipped before April 15, 1957.)	0050-5
13a	Operating weight only (For Bells shipped after April 15, 1957.)	0050-51A
14	Guide stud	0050-20
15	Roller assembly	0050-10
16	Bushing	0050-16
17	Mechanism frame	0050-3
18	Drive gear and single step cam	0050-33
19	Drive gear and double step cam	0050-34
20	Shaft gear	0050-24
21	Bushing	0050-15
22	Bushing	990-13
23	Steel gong	990-11
24	Clapper complete	0050-23
26	Gear shaft with oil cup	0050-35
27	Capacitor for 115 Volt A.C. motor	0700-210
27a	Capacitor for 230 Volt A.C. motor	0700-210A
29	D.C. motor (specify voltage)	Dg. 0050-28
30	A.C. motor (Specify voltage and frequency)	Dg. 0050-29
32	Motor pinion	0050-25
33	Connecting gear	0050-7
34	Clapper pivot pin	990-31
35	Gong Support	990-150A
36	Mechanism housing	990-152A
37	Base socket for 4″ pipe post	990-154A
38	Base socket for 5″ pipe post	990-155A
39	Hand hole cover with screws	990-156B
40	Housing cover with packing	990-151B
41	Hasp eye bolt	1410-11
42	Locking hasp	1410-30
43	Terminal Strip	1056-14
44	Bumper	0050-22

Mounting Fittings for Highway Crossing Bells

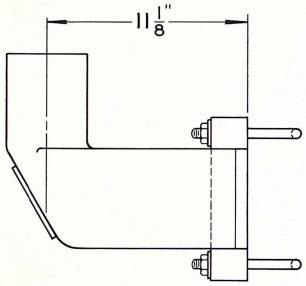

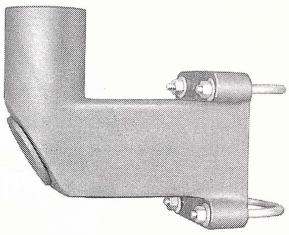

Gooseneck Bracket
Ref. A

Reducer
5" to 4" I.D. Pipe
Ref. B

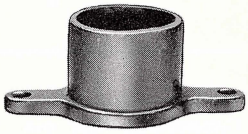

Adaptor for Mounting
Bells on Flat Surfaces
Ref. C and D

Gooseneck Brackets are furnished for Bell Sockets 4½" I.D. (equivalent to 4" I.D. pipe post.) Gooseneck Brackets may be used with bolts or lag screws to mount bells on the side of buildings or other vertical surfaces.

Ref. No.	Description	Piece No.
A	Type 873 Gooseneck Bracket complete with "U" bolts for 4" I.D. Pipe Mounting	873-29B
A1	Same as Ref. A but for 3½" I.D. pipe mounting	873-28B
A2	Same as Ref. A but for 5" I.D. pipe mounting	873-30B
A3	Same as Ref. A but for 3" I.D. pipe mounting	873-27B
A4	Same as Ref. A but for 6" I.D. pipe mounting	873-31B
A5	Same as Ref. A but for 8" I.D. pipe mounting	873-32B
B	Reducer for 5" to 4" I.D. pipe	990-63
C	Adaptor for mounting bell with socket for 4" I.D. pipe on top of any flat surface	216-2
D	Adaptor for mounting bell with socket for 3" I.D. pipe on top of any flat surface	216-3

Type 1275 Pedestrian Crossing Bell

For 6 to 16 Volts D.C.

CAST ALUMINUM HOUSING 8″ STEEL GONG

Approximately 225 Strokes Per Minute

Bakelite Faced Soft-tone Hammer

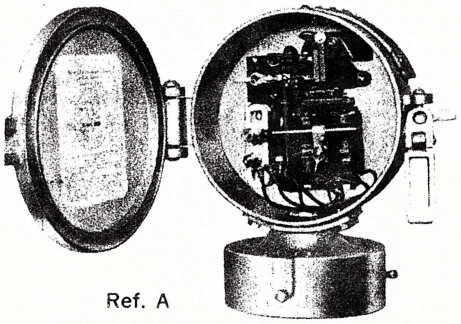

Ref. A

Type 1275 Pedestrian Crossing Bell was especially designed for use in residential areas where too loud a warning might prove offensive. It is identical with the well-known Type 222 Bell except that it is built with an 8″ gong and proportionally smaller parts. The Type 1275 bell is equipped with a variable resistance for 6 to 16 volts D.C. operation.

It is furnished with either a mounting socket, attached to the base, for mounting on the top of a pipe post or with adaptor clamps and "U" bolts for mounting on the side of the mast, as listed below.

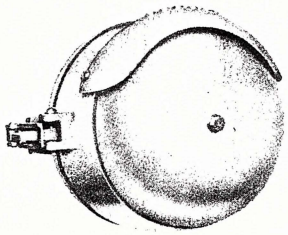

Ref. B

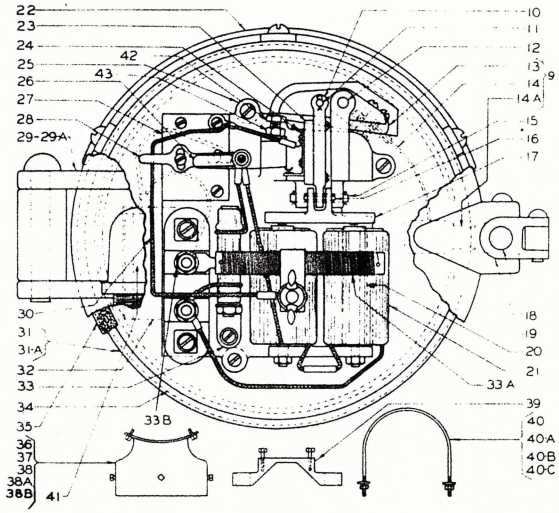

Ref. No.	Description	Piece No.
A	Type 1275 Pedestrian Crossing Bell for mounting on top of 3½″ I.D. pipe post	1275BR
A1	Same as Ref. A but for mounting on 4″ I.D. pipe post	1275CR
A2	Same as Ref. A but for mounting on 3″ I.D. pipe post	1275DR
A3	Same as Ref. A but for mounting on 5″ I.D. pipe post	1275FR
A4	Same as Ref. A but for mounting on 6″ I.D. pipe post	1275HR
B	Type 1275 Pedestrian Crossing Bell with adaptor clamps and "U" Bolts, for mounting on side of pipe post. (Specify I.D. of pipe)	1275AR

For Replacement Parts Listing see opposite page.

Type 1275 Pedestrian Crossing Bell

Cast aluminum parts furnished for the Case, Cover, Mounting Socket and Rain Shield are interchangeable with cast iron parts formerly used.

REPLACEMENT PARTS

Ref. No.	Description	Piece No.
9	Assembly of oscillator and hammer	1275-3B
10	Operating link	1282
11	Operating link stud	1293
12	Oscillator pin	1294
13	Oscillator complete with bushings and stud	1280-1
14	Hammer complete with bakelite head	1299B
14a	Bakelite head only	1299-5B
15	Armature pin	1292
16	Link bracket pin	1291
17	Armature	1281-1
18	Locking bolt	1410-11CA
19	Locking hasp and nut	1410-31CA
20	Magnet core	1296
21	Magnet coil (2 required)	1297-3-5
22	Rain shield	1284CA
23	Contact mounting block	1287
24	Moving contact	1288
25	Base plate	1283
26	Contact finger	1289
27	Contact mounting block	1286
28	Contact finger support	1285
29	Door complete (for side of pole mounting)	1276-5CA
29a	Door complete (for top of pole mounting)	1276-3CA
30	Flexible wire lead	1288-1
31	Bell case (for top of pole mounting)	1277CA
31a	Bell case (for side of pole mounting)	1277-1CA
32	¼ M.F. condenser	1101-87B
33	Non-arcing resistance	1235
33a	Variable resistance unit	1210-28A
33b	Variable resistance unit spacer	1290-5
34	Steel gong	1295
35	Felt door packing strips	1276-4
36	Case socket for 4" I.D. pipe w/mounting screws and set screws	1278-3CA
37	Case socket for 3½" I.D. pipe w/mounting screws and set screws	1278-4CA
38	Case socket for 3" I.D. pipe w/mounting screws and set screws	1278-5CA
38a	Case socket for 5" I.D. pipe w/mounting screws and set screws	1278-5ACA
38b	Case socket for 6" I.D. pipe w/mounting screws and set screws	1278-6CA
39	Clamp for mounting bell to side of pole (2 required)	1279-1
40	U-bolt for mounting bell to 4" I.D. pole (2 required)	1276-11
40a	U-bolt for mounting bell to 3½" I.D. pole (2 required)	1276-10
40b	U-bolt for mounting bell to 3" I.D. pole (2 required)	1276-13
40c	U-bolt for mounting bell to 5" I.D. pole (2 required)	1276-12
41	Wire outlet (used only on 1275A bell)	1222-15
42	No. 10-24x1/2" long hex.head steel cap screw	
43	No. 10-24 steel hex.nut	

Type 1275 Pedestrian Crossing Bell

For 6 to 16 Volts D.C.

CAST ALUMINUM HOUSING 8″ STEEL GONG

Approximately 225 Strokes Per Minute

Bakelite Faced Soft-tone Hammer

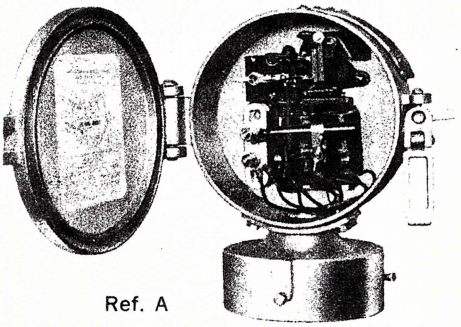

Ref. A

Type 1275 Pedestrian Crossing Bell was especially designed for use in residential areas where too loud a warning might prove offensive. It is identical with the well-known Type 222 Bell except that it is built with an 8″ gong and proportionally smaller parts. The Type 1275 bell is equipped with a variable resistance for 6 to 16 volts D.C. operation.

It is furnished with either a mounting socket, attached to the base, for mounting on the top of a pipe post or with adaptor clamps and "U" bolts for mounting on the side of the mast, as listed below.

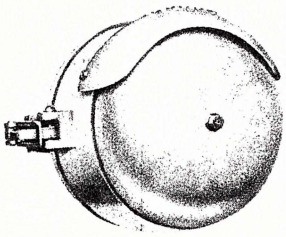

Ref. B

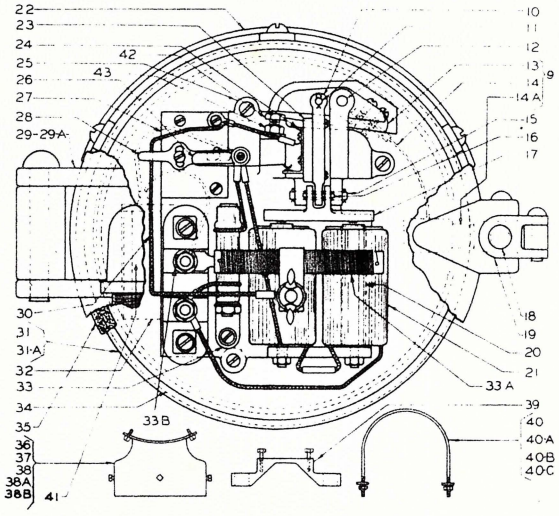

Ref. No.	Description	Piece No.
A	Type 1275 Pedestrian Crossing Bell for mounting on top of 3½″ I.D. pipe post	1275BR
A1	Same as Ref. A but for mounting on 4″ I.D. pipe post	1275CR
A2	Same as Ref. A but for mounting on 3″ I.D. pipe post	1275DR
A3	Same as Ref. A but for mounting on 5″ I.D. pipe post	1275FR
A4	Same as Ref. A but for mounting on 6″ I.D. pipe post	1275HR
B	Type 1275 Pedestrian Crossing Bell with adaptor clamps and "U" Bolts, for mounting on side of pipe post. (Specify I.D. of pipe)	1275AR

For Replacement Parts Listing see opposite page.

Type 1275 Pedestrian Crossing Bell

Cast aluminum parts furnished for the Case, Cover, Mounting Socket and Rain Shield are interchangeable with cast iron parts formerly used.

REPLACEMENT PARTS

Ref. No.	Description	Piece No.
9	Assembly of oscillator and hammer	1275-3B
10	Operating link	1282
11	Operating link stud	1293
12	Oscillator pin	1294
13	Oscillator complete with bushings and stud	1280-1
14	Hammer complete with bakelite head	1299B
14a	Bakelite head only	1299-5B
15	Armature pin	1292
16	Link bracket pin	1291
17	Armature	1281-1
18	Locking bolt	1410-11CA
19	Locking hasp and nut	1410-31CA
20	Magnet core	1296
21	Magnet coil (2 required)	1297-3-5
22	Rain shield	1284CA
23	Contact mounting block	1287
24	Moving contact	1288
25	Base plate	1283
26	Contact finger	1289
27	Contact mounting block	1286
28	Contact finger support	1285
29	Door complete (for side of pole mounting)	1276-5CA
29a	Door complete (for top of pole mounting)	1276-3CA
30	Flexible wire lead	1288-1
31	Bell case (for top of pole mounting)	1277CA
31a	Bell case (for side of pole mounting)	1277-1CA
32	¼ M.F. condenser	1101-87B
33	Non-arcing resistance	1235
33a	Variable resistance unit	1210-28A
33b	Variable resistance unit spacer	1290-5
34	Steel gong	1295
35	Felt door packing strips	1276-4
36	Case socket for 4" I.D. pipe w/mounting screws and set screws	1278-3CA
37	Case socket for 3½" I.D. pipe w/mounting screws and set screws	1278-4CA
38	Case socket for 3" I.D. pipe w/mounting screws and set screws	1278-5CA
38a	Case socket for 5" I.D. pipe w/mounting screws and set screws	1278-5ACA
38b	Case socket for 6" I.D. pipe w/mounting screws and set screws	1278-6CA
39	Clamp for mounting bell to side of pole (2 required)	1279-1
40	U-bolt for mounting bell to 4" I.D. pole (2 required)	1276-11
40a	U-bolt for mounting bell to 3½" I.D. pole (2 required)	1276-10
40b	U-bolt for mounting bell to 3" I.D. pole (2 required)	1276-13
40c	U-bolt for mounting bell to 5" I.D. pole (2 required)	1276-12
41	Wire outlet (used only on 1275A bell)	1222-15
42	No. 10-24x1/2" long hex.head steel cap screw	
43	No. 10-24 steel hex.nut	